Grid Solutions

# MULTILIN D60

## High-Speed Transmission Line Protection with Single and Three-Pole Tripping

The Multilin™ D60 is a high-end, cost-effective distance protection relay intended for protecting transmission lines and cables, providing reliable and secure operation even under the worst case power system conditions. Part of the Universal Relay (UR) family, the D60 comes with a variety of versatile features, truly integrating protection, monitoring, metering, communication and control in one easy-to-use device.

### Key Benefits

- Six zones quad or mho, phase and ground sub-cycle distance protection for greater coordination flexibility Reliable and secure protection on series compensated lines
- Superior phase selection algorithm ensures secure high-speed single-pole tripping
- Supports multiple standard and customizable pilot schemes for fast fault clearance within the protected zone
- Simplified teleprotection interfaces with direct I/O communications hardware for transfer trip and pilot-aided distance schemes
- Embedded Synchrophasor measurement capabilities (per IEEE® C37.118), eliminating the need for dedicated PMUs and support for synchrophasor multi-cast (per IEC® 61850-90-5) reducing bandwidth and communications infrastructure costs
- An integrated large, full color display, provides real-time visualization and control of the protected bay, via a bay mimic as well as annunciator functionality and graphical visualization of phasors
- Advanced IEC 61850 Ed. 1 and Ed. 2 certified implementation, complete settings via SCL files and comprehensive process bus support (IEC 61850-9-2LE or IEC 61869* or IEC 61850-9-2 Hardfiber) ensures interoperability, device managing optimization and reduced cost of ownership
- Routable GOOSE (R-GOOSE) enables GOOSE messages going beyond the substation, which enables wide area protection and control applications
- Increased network availability via failover time reduced to zero through IEC® 62439-3 “PRP” support
- Supports IEEE C37.111-1999/2013, IEC 60255-24 Ed 2.0 COMTRADE standard
- Embedded multi-range signal oscillation detection (MSOD)

### Applications

- Overhead lines and underground cables of different voltage levels
- Single and dual-breaker circuits requiring single/three pole autoreclosing and independent synchrocheck
- Circuits with in-zone power transformers and tapped transformer feeders
- Secure application with Capacitively-Coupled Voltage Transformers (CCVTs)
- Backup protection for generators, transformers and reactors
- Ground isolated and peterson-coil systems

### Protection & Control

- Independent Phase & Ground distance (5 zones) with optional 6-zones and sub-cycle perfomance
- Reverse power, out-of-step tripping and power swing blocking
- Extensive back-up protection, four-shot dual breaker autoreclose, TGFD and more
- Protection and control functionality in one box, reducing the number of devices
- High density inputs/outputs to support the control of many switchyard assets – all from one powerful device
- Integrated large, full color display, for real-time visualization and control of the protected bay

### Advanced Communications

- 3 independent Ethernet ports with IEEE 1588 support
- IEC 61850-9-2LE/IEC 61869* networked or IEC61850-9-2 Hardfiber process bus support
- Direct I/O for secure, high-speed exchange of data for DTT & pilot-aided schemes

### Cyber Security

- CyberSentry™ provides high-end cyber security aligned to industry standards and services (NERC® CIP, AAA, Radius, RBAC, Syslog)

### Monitoring & Metering

- Advanced recording capabilities with high-capacity event recorder, configurable and extended waveform capture and data logger
- P & M class synchrophasors of voltage, current, and sequence components
- Embedded multi-range signal oscillation detection (MSOD)

GE VERNOVA

## Protection & Control

As part of the UR family of Protection & Control devices, the D60 offers a high degree of modularity in its design and functionality, providing superior performance while meeting the toughest requirements of the marketplace.

Advanced protection and control features of this relay includes:

### Distance Protection

The core of the D60 relay is the distance function providing a high degree of sensitivity and selectivity for all types of faults. The distance function comes with five zones of phase distance and ground distance, providing the user maximum flexibility to cater to different applications, including primary line protection and backup protection for busbars, generators, transformers and reactors. Optional 6-zones and sub-cycle performance are available via SW option. The relay can be applied to power systems with different earthing conditions, lines with in-zone transformers or tapped transformer feeders, and overhead lines with series compensation. Each zone element for the phase and ground distance can be independently set as quad or mho characteristics with the flexibility of designing different characteristic shapes to suit different power system conditions.

### D60 - Protection, Metering, Monitoring and Control

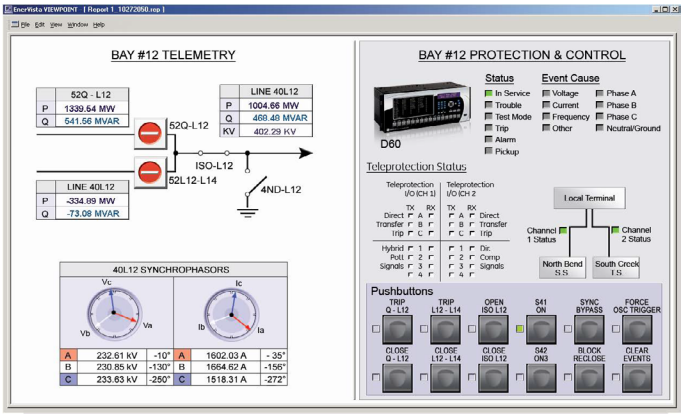


*The D60 is the single point for protection, control, metering, and monitoring in one integrated device that can be easily connected directly to HMI or SCADA monitoring and control systems.*

## Functional Block Diagram

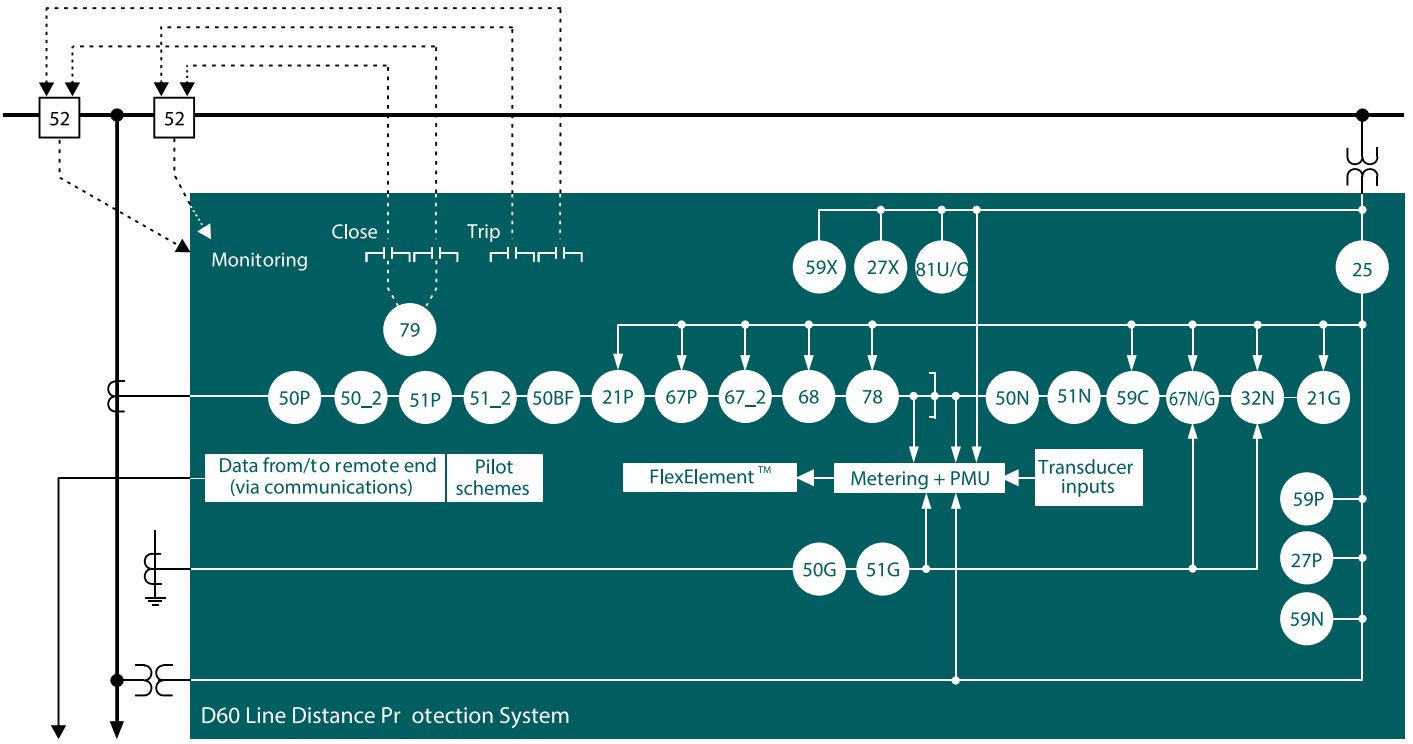

## ANSI® Device Numbers & Functions

| DEVICE NUMBER | FUNCTION |
|---|---|
| 21G | Ground distance |
| 21P | Phase distance |
| 25 | Synchrocheck |
| 27P | Phase undervoltage |
| 27X | Auxiliary undervoltage |
| 32N | Wattmetric zero-sequence directional |
| 49 | Thermal overload protection |
| 50BF | Breaker failure |
| 50DD | Current disturbance detector |
| 50G | Ground instantaneous overcurrent |
| 50N | Neutral instantaneous overcurrent |
| 50P | Phase instantaneous overcurrent |

| DEVICE NUMBER | FUNCTION |
|---|---|
| 50_2 | Negative-sequence instantaneous overcurrent |
| 51G | Ground time overcurrent |
| 51N | Neutral time overcurrent |
| 51P | Phase time overcurrent |
| 51_2 | Negative-sequence time overcurrent |
| 52 | AC circuit breaker |
| 59C | Compensated overvoltage |
| 59N | Neutral overvoltage |
| 59P | Phase overvoltage |
| 59X | Auxiliary overvoltage |
| 59_2 | Negative-sequence overvoltage |
| 67N | Neutral directional overcurrent |

| DEVICE NUMBER | FUNCTION |
|---|---|
| 67P | Phase directional overcurrent |
| 67_2 | Negative-sequence directional overcurrent |
| 68 | Power swing blocking |
| 78 | Out-of-step tripping |
| 79 | Automatic recloser |
| 81R | Rate of change frequency |
| 81U/O | Under/overfrequency |
| TGFD | Transient ground fault detection |
| | Harmonic/Inrush detection |

The advanced comparator-based distance elements provide the utmost security, sensitivity and selectivity for different types of faults. Superior digital filtering techniques provide secure and optimum reach accuracy even under worst case CVT transients. Secure directional discrimination is achieved by using positive sequence memory voltage polarization, providing reliable directionality for worst case close-in faults.

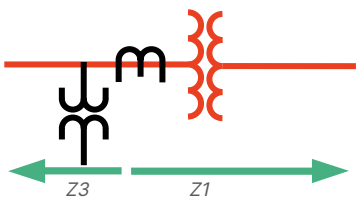


*Z1 looking through a transformer.*

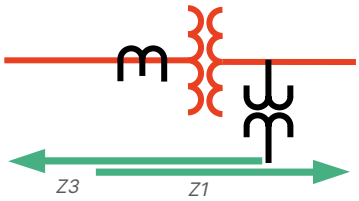


*Z1 & Z3 looking through a transformer.*

Dual distance algorithms deliver exceptional security and speed performance to ensure average operating times of 1.5 cycles for 75% line reach and SIR 30, and <2.5 cycles for 90% line reach and SIR 60. The D60 employs a well-proven algorithm for phase selection, which provides faster, secure and reliable faulted phase identification for single-pole tripping and proper fault distance calculation for a variety of power system conditions. An additional voltage monitoring function provides extra security to the distance element, which can be used to block the distance elements under voltage source fuse failure conditions.

### In-Zone Transformer Compensation

Phase distance protection in the D60 can be used to detect faults through different types of three-phase wye/delta transformers, allowing the application of the D60 for backup protection on generators. VTs and CTs can be installed independently of each other on either side of the power transformer. The relay automatically compensates for transformer connections, to guarantee accurate reach for any type of fault.

### Load Encroachment

The load encroachment feature offers discrimination between line loading conditions and fault conditions, especially for long lines under heavy loads, by supervising the distance elements or any overcurrent element. This prevents unwanted tripping under heavy line load conditions and enables optimum operation of the line, while meeting regulatory requirements for line loading.

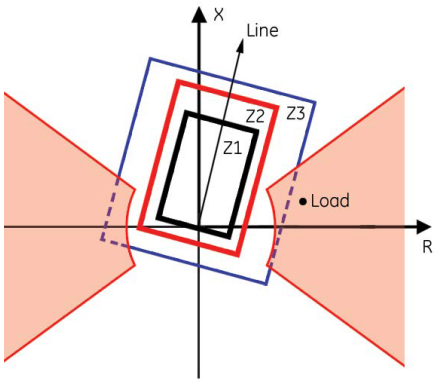


*Distance relay quadrilateral characteristics supervised by the load encroachment function.*

### Fault Locator

The integrated fault locator provides distance to fault in kilometers or miles. Parallel line zero-sequence current compensation and load current compensation enable the D60 to provide improved accuracy for fault distance measurement.

### Line Pickup (Switch-on-to Fault)

The line pickup feature uses a combination of undercurrent and undervoltage to identify a line that has been de-energized (line end open). Three instantaneous overcurrent elements are used to identify a previously de-energized line that has been closed on to a fault.

### Power Swing Detection

Dynamic transients in the power system, due to short-circuits, circuit switching, or load unbalance changes, can travel across the power network as power swings that are characterized by fluctuating currents and voltages. This can result in unwanted tripping since distance elements can respond to these power swings as faults. The D60 power swing detection element provides both power swing blocking and out-of-step tripping functions. The element measures the positive sequence apparent impedance and traces its locus with respect to either a two or three-step user-selectable mho or quad operating characteristic. Negative sequence current supervisors provide extended selectivity for detecting evolving faults that may appear as a power swing event (faults with slow moving impedance locus).

### Series Compensated Lines

D60 provides enhanced stability and security by employing an adaptive distance reach control to cope with the overreaching and sub-synchronous oscillations when applied to, or in the vicinity of, series compensated lines. For directional integrity the relay uses memory voltage polarization and a multi-input comparator to deal with current inversion issues in series compensated lines.

### Single-Pole Tripping

The D60 relay uses an advanced phase selection algorithm that provides fast and accurate fault type identification even under weak in-feed conditions. A convenient trip function is built-in to coordinate actions of the key elements of the single-pole tripping package.

### Communication Aided (Pilot) Schemes

D60 supports different teleprotection functions for fast fault clearance for any faults within the protected line. The following types of pilot-aided schemes are available in the D60:

- Direct Underreach Transfer Trip (DUTT)
- Permissive Underreach Transfer Trip (PUTT)
- Two Permissive Overreach Transfer Trip (POTT)
- Hybrid Permissive Overreach Transfer Trip (HYB POTT): permissive echo and transient blocking logic incorporated
- Directional Comparison Blocking Scheme (DCB)
- Directional Comparison Unblocking Scheme (DCUB)
- Customizable version of the POTT and DCB schemes (POTT1 and DCB1)

### Undervoltage & Overvoltage Protection

Long lines under lightly loaded or no-load conditions may experience voltages exceeding the rated insulation voltage level. Use the three phase overvoltage elements in the D60 to detect and trip on this condition. A second compensated overvoltage element detects overvoltage caused by breakers opening at the remote end. The D60 also provides additional voltage functions, including neutral overvoltage, negative sequence overvoltage and phase undervoltage.

### Overcurrent Functions

The D60 provides thermal overload, and time and instantaneous overcurrent elements for phase, neutral, ground, negative sequence, phase and neutral directional. All of them can run in parallel with distance elements or can be programmed to provide overcurrent protection under conditions when the distance element is blocked (example VT fuse failure).

### TGDF

The Transient Ground Fault Detection (TGFD) function, sometimes referred to as Transient Earth Fault Detection (TEFD), is a technique used to detect the direction of a ground fault in three different grounding systems: ungrounded, resistance grounded, and compensated/resonant ground (i.e. Peterson coil grounded). The advantage of an ungrounded or compensated ground system is that the most common single phase-to-ground fault does not cause fault current to flow, and therefore the system remains operational, enhancing network reliability.

### Autorecloser

The D60 provides multi-shot autoreclosing (up to 4 shots) for single or three-pole autoreclose on all types of faults with independently programmable dead time for each shot. Autoreclosing can be dynamically blocked by user-programmable logic. Four different autoreclose operation modes are available, enabling users to select the reclosing mode to suit specific applications.

### Synchronism Check

The D60 provides ten synchrocheck elements that monitor voltage difference, phase angle difference and slip frequency taking the CB closing time into account to ensure proper breaker closure as per user-defined settings. The D60 provides additional enhancements in synchronizing, by checking dead source conditions for synchronism bypass under these conditions.

### Multiple Breaker Configurations

The D60 supports dual-breaker busbar configurations, such as breaker-and-a-half or ring bus arrangements, providing dual-breaker autoreclose, dual synchrocheck elements, and dual independent breaker failure elements. The design provides secure operation during external faults with possible CT saturation.

### D60 Breaker-and-a-Half Configuration

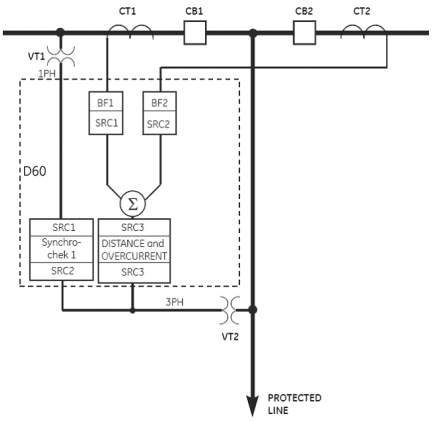


*D60 supports breaker-and-a-half configuration. Two CTs can be brought in individually and summed off at each terminal.*

### Breaker Failure

The D60 is able to provide fully independent breaker failure protection for the breakers associated to the line when connected to a substation with a breaker-and-a-half or ring bus arrangement. The D60 provides the elements to perform two independent breaker failure functions.

### Harmonic/Inrush detection

The Harmonic detection element monitors the selected 2nd to 5th harmonic or Total Harmonics Distortion (THD), which is present in the phase currents. The relay provides six identical Harmonic Detection elements.

During transformer energization or motor starts, the inrush current present in phase currents can impact some sensitive elements, such as negative sequence overcurrent. Therefore, the ratio of the second harmonic to the fundamental magnitude per phase is monitored, while exceeding the settable pickup level, an operand is asserted, which can be used to block such sensitive elements.

## IEC 61869* and 61850-9-2LE Process Bus

Three UR process bus modules enable communicating to Merging Units "MU" that comply to either IEC 61869* standard or IEC 61850-9-2LE technical report. MUs connect to the primary asset and translate analog signals and digital status/ commands to standard sample values "SV" data and GOOSE messages.

Flexibility for connecting to different network size and topology is granted through 100Mbps and/or 1Gbps Ethernet port support, plus IEC 62439 PRP or HSR standard redundancy, plus Star, Ring and Point-to-point network support.

For time synchronization purposes, this Process bus module can become an IEEE 1588 slave clock (61850-9-3 profile) or a 1588 Grand Master clock which removes the need of external time sources connected to the process bus network.

Customers who may not be using GE Vernova MU devices, could use MU from other vendors. Interoperability with MU from other vendors is expected when they comply to the mentioned standards.

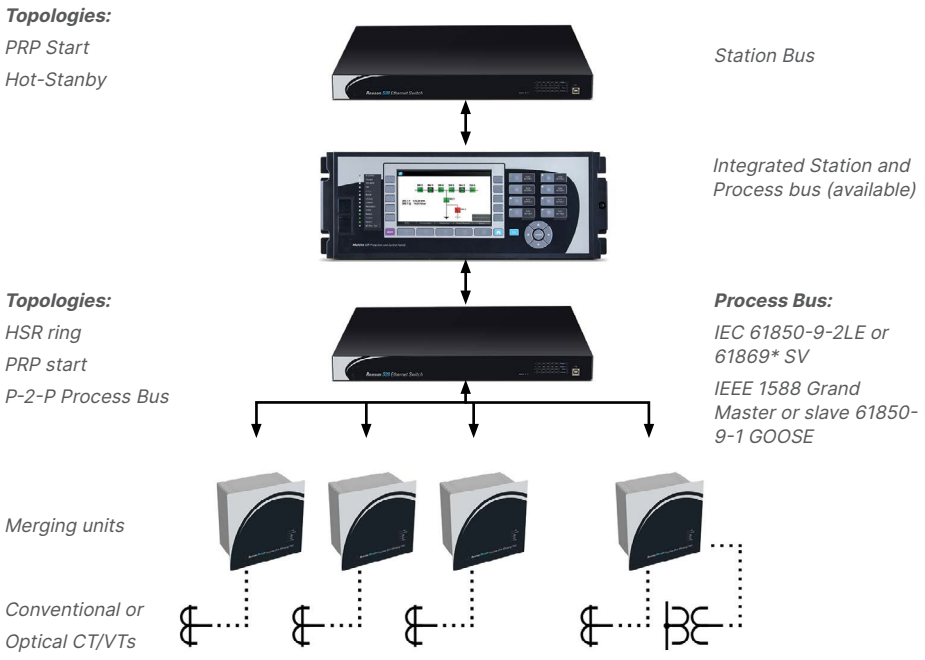


## IEC 61850-9-2 HardFiber Process Bus

The IEC 61850 Process Bus module is designed to interface with the Multilin HardFiber System, allowing bi-directional IEC 61850 fiber optic communications. The HardFiber System is designed to integrate seamlessly with existing UR applications, including protection functions, FlexLogic™, metering and communications.

The Multilin HardFiber System offers the following benefits:

- Communicates using open standard IEC 61850 messaging
- Drastically reduces P&C design, installation and testing labor by eliminating individual copper terminations
- Integrates with existing D60's by replacing traditional CT/VT inputs with the IEC 61850 Process Bus module
- Does not introduce new cyber security concerns

Visit the HardFiber System product page on the Grid Solution website for more details.

## Advanced Automation

The D60 incorporates advanced automation features including powerful FlexLogic programmable logic, communication, and SCADA capabilities that far surpass what is found in the average line protection relay. The D60 integrates seamlessly with other UR relays for complete system protection, including unit & auxiliary transformers, and balance of plant protection.

### FlexLogic

FlexLogic is the powerful UR-platform programming logic engine that provides the ability to create customized protection and control schemes, minimizing the need and associated costs of auxiliary components and wiring. With 1024 lines of FlexLogic, the D60 can be programmed to provide required tripping logic along with custom scheme logic for breaker control (including interlocking with external synchronizers), transfer tripping schemes for remote breakers & dynamic setting group changes.

### Scalable Hardware

The D60 is available with a multitude of I/O config-urations to suit the most demanding application needs. The expandable modular design allows for easy configuration and future upgrades.

### Settings Security & Device Status Reports

**SECURITY/CHANGE HISTORY REPORT**

Generated at: Nov 20 2009 11:44:39

**Device Summary**

| | |
|---|---|
| Device Name: | Point Blank |
| Device Type: | UR |
| Order Code: | D60-H00-HCH-F8F-H6K-P4D-U5A |
| Firmware Version: | 5.20 |
| Serial Number: | ABHC05000009 |
| IP Address: | 3. 94.248.240 |

**Settings Summary**

| | |
|---|---|
| Setting File Name: | D60_PointBlankFeeder_1, Version 480 |
| Last Changed: | Nov 11 2006 22:04:58.070966 via Ethernet |
| Changed by Whom (MAC Address): | 00166FB5EFE3 |

**Setting Changes History**

| Event | Date of Change | # of Changes | Password Entered | Method of Change | Changed by Whom (MAC address) | Filename Uploaded | Rev | Status | Firm. Version |
|---|---|---|---|---|---|---|---|---|---|
| 46 | 11/11/09 11:48 PM | 1 | Yes | Ethernet | 00166FB5EFE3 | Point Blank F1 Setting | 46 | In Service | 5.20 |
| 45 | 11/11/09 10:59 PM | 2 | Yes | Ethernet | 00166FB5EFE3 | Point Blank F1 Setting | 45 | In Service | 5.20 |
| 44 | 11/11/09 10:51 PM | 3 | Yes | Ethernet | 0000000001DE | Point Blank F1 Setting | 44 | In Service | 5.20 |
| 43 | 11/11/09 10:04 PM | 39 | Yes | Ethernet | 00166FB5EFE3 | Point Blank F1 Setting | 43 | In Service | 5.20 |
| 42 | 11/08/09 07:46 PM | 13 | Yes | Ethernet | 00166FB5EFE3 | Point Blank F2 Setting | 42 | In Service | 5.20 |
| 41 | 10/24/09 09:17 AM | 1 | Yes | Keypad | | | 41 | In Service | 5.20 |
| 40 | 10/16/09 09:02 AM | 49 | Yes | Front Port | 000F1FCBD808 | | 40 | In Service | 5.20 |
| 39 | 10/16/09 08:59 AM | 0 | Yes | Keypad | | | 39 | Out of Service | 5.20 |
| 38 | 10/12/09 06:02 PM | 2 | Yes | Keypad | | | 38 | In Service | 5.20 |
| 37 | 10/12/09 05:46 PM | 5 | Yes | Front Port | 00166FB5EFE3 | | 37 | In Service | 5.20 |

Version 2.00 Page 1

*Track changes of settings to your D60 & view health and operating status by generating a report with the click of a button.*

- Flexible, modular high density I/O covering a broad range of input signals and tripping schemes
- Types of digital outputs include trip-rated Form-A and Solid State Relay (SSR) mechanically latching, and Form-C outputs
- RTDs and DCmA inputs are available to monitor equipment parameters, such as temperature and pressure

## Monitoring and Metering

The D60 includes high accuracy metering and recording for all AC signals. Voltage, current, and power metering are built into the relay as a standard feature. Current and voltage parameters are available as total RMS magnitude, and as fundamental frequency magnitude and angle.

### Fault and Disturbance Recording

The advanced disturbance and event recording features within the D60 can significantly reduce the time needed for postmortem analysis of power system events and the creation of regulatory reports. Recording functions include:

- Sequence of Event (SOE)
  - 1024 time stamped events
- Oscillography
  - Supports IEEE C37.111-1999/2013, IEC 60255-24 Ed 2.0 COMTRADE standard
  - 128 digital & up to 56 analog channels
  - Events with up to 45s length
- Data Logger and Disturbance Recording
  - 16 channels up to 1 sample/cycle/channel
- Fault Reports
  - Powerful summary report of pre-fault and fault values

The very high sampling rate and large amount of storage space available for data recording in the D60 can eliminate the need for installing costly stand-alone recording equipment.

### Advanced Device Health Diagnostics

The D60 performs comprehensive device health diagnostic tests at startup and continuously during run-time to test its own major functions and critical hardware. These diagnostic tests monitor for conditions that could impact security and availability of protection, & present device status via SCADA communications and front panel display. Providing continuous monitoring and early detection of possible issues help improve system uptime.

- Comprehensive device health diagnostic performed at startup
- Monitors the CT/VT input circuitrto validate the integrity of all signals

### Multi-range Signal Oscillation Detection (MSOD)

A general purpose multi-range signal oscillation detector (MSOD) meets a broad-range of application needs for detecting power system oscillation. Oscillations are always present in power systems due to the electromechanical nature of the electric grid. However, some oscillations may become poorly or negatively damped, and could lead to system instabilities, equipment damages or system blackout if such oscillations are not detected and proper remedy actions are not taken in time.

## Cyber Security – CyberSentry UR

CyberSentry™ is a software option that delivers wide range of cyber security features that help customers to comply with NERC CIP, NIST® IR 7628, IEC 62351 and IEC 62443 cyber security requirements and standards. Additionally secure FW upgrade is granted through UR Setup's digital signature validation capabilities. This software option delivers the following core features:

### AAA Server Support (Radius/LDAP)

Enables integration with centrally managed authentication and accounting of all user activities and uses modern industry best practices and standards that meet and exceed NERC CIP requirements for authentication and password management.

### Role Based Access Control (RBAC)

Efficiently administrate users and roles within UR devices. The new and advanced access functions allow users to configure up to five roles for up to eight configurable users with independent passwords. The standard "Remote Authentication Dial In User Service" (Radius) is used for authentication.

### Event Recorder (Syslog for SEM)

Capture all cyber security related events within a SOE element (login, logout, invalid password attempts, remote/local access, user in session, settings change, FW update, etc), and then serve and classify data by security level using standard Syslog data format. This will enable integration with established SEM (Security Event Management) systems.

## ‘Communications

The D60 provides for secure remote data and engineering access, making it easy and flexible to use and integrate into new and existing infrastructures. Fiber optic Ethernet provides high-bandwidth communications allowing for low-latency controls and high-speed file transfers of relay fault and event record information. The available three independent Ethernet ports, redundant Ethernet option and the embedded managed Ethernet switch provide the means to create fault tolerant communication architectures in an easy, cost-effective manner.

The D60 supports the most popular industry standard protocols enabling easy, direct integration into monitoring and SCADA systems.

- IEC 61850 Ed. 1 and Ed. 2 Station Bus, IEC 61850-2-2LE / IEC 61869* networked or IEC 61850-9-2 HardFiber Process Bus, and IEC 61850-90-5 PMU over GOOSE support
- DNP 3.0 (serial & TCP/IP)
- Ethernet Global Data (EGD)
- IEC 60870-5-103 and IEC 60870-5-104
- Modbus RTU, Modbus TCP/IP
- HTTP, TFTP, SFTP and MMS file transfer
- IEEE1588 and redundant SNTP for time synchronization
- PRP as per IEC 62439-3
- IEC61850 GOOSE, Routable GOOSE and legacy UCA fixed GOOSE

### Interoperability with Embedded IEC 61850 Ed. 1 and Ed. 2

The new IEC 61850 implementation in the UR Family positions GE Vernova as an industry leader in this standard.

- Implements, user selectable, Ed. 1 and Ed. 2 of the standard across the entire UR Family
- Provides full relay setting management via standard SCL files (ICD, CID and IID)
- Enables automated relay setting management using 3rd party tools through standard file transfer services (MMS and SFTP)
- Increases the number of Logical Devices and data mapped to them, GOOSE messages from up to 64 remote devices, and reports to support different organizational needs for data transfer and reduce dependency on generic logical nodes
- Configures GE vernova Systems based on IEC 61850 using universal 3rd party tools
- Multicast IEEE C37.118 synchrophasor data between PMU and PDC devices using IEC 91850-90-5
- R-GOOSE enable customer to send GOOSE messages beyond the substation, which enables WAPC and more cost effective communication architectures for wide area applications

## Power System Troubleshooting

The D60 contains many tools and reports that simplify and reduce the amount of time required for troubleshooting power system events.

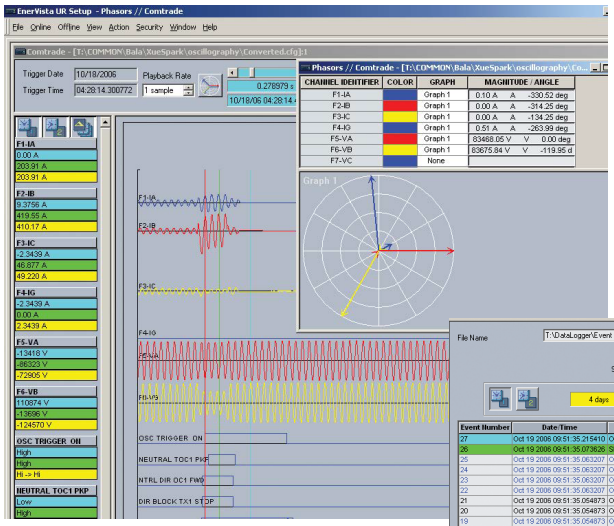


*Analyze transmission line faults using system voltage, current and appropriate pickup flags that are measured & recorded up to 64 samples/cycle.*

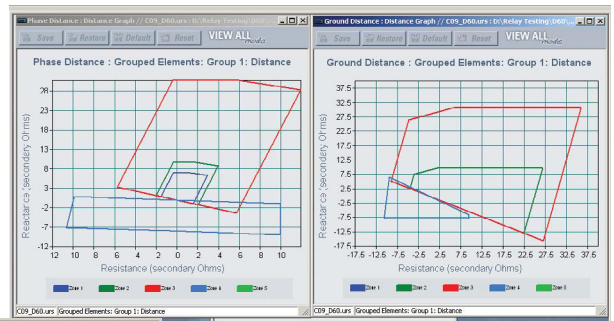

*Graphically view zone settings for ground phase distance elements for the selected zones and the power swing detection element.*

*Record the operation of the internal D60 elements and external connected devices with 1ms time-stamped accuracy to identify the Sequence of Operation of station devices during faults and disturbances.*

### Direct I/O Messaging

Direct I/O allows for the sharing of high-speed digital information between multiple UR relays via direct back-to-back connections or multiplexed through a standard DS0 multiplexer channel bank. Regardless of the connection method, direct I/O provides continuous real-time channel monitoring that supplies diagnostics information on channel health. Direct I/O provides superior relay-to-relay communications that can be used in advanced interlocking and other special protection schemes.

- Communication with up to 16 UR relays in single or redundant rings rather than strictly limited to simplistic point-to-point configurations between two devices
- Connect to standard DS0 channel banks through standard RS422, G.703 or IEEE C37.94 interfaces or via direct fiber optic connections
- No external or handheld tester required to provide channel diagnostic information

### LAN Redundancy

Substation LAN redundancy has been traditionally accomplished by reconfiguring the active network topology in case of failure. Regardless of the type of LAN architecture (tree, mesh, etc), reconfiguring the active LAN requires time to switchover, during which the LAN is unavailable. UR devices deliver redundancy as specified by PRP-IEC 62439-3, which eliminates the dependency on LAN reconfiguration and the associated switchover time. The UR becomes a dual attached node that transmits data packets over both main and redundant networks simultaneously, so in case of failure, one of the data packets will reach the receiving device with no time delay.

### Multi-Language

UR devices support multiple languages: English, French, Russian, Chinese, Turkish, German, Polish and Japanese. These language options are available on the front panel, in the EnerVista setup software, and in the product manuals. Easily switch between English and an additional language on the local displays without uploading new firmware.

## EnerVista Software

The EnerVista suite is an industry-leading set of software programs that simplifies every aspect of using the D60 relay. The EnerVista suite provides all the tools to monitor the status of the protected asset, maintain the relay, and integrate information measured by the D60 into DCS or SCADA monitoring systems. Convenient COMTRADE and SOE viewers are an integral part of the UR setup software included with every UR relay, to carry out postmortem event analysis and ensure proper protection system operation.

### EnerVista Launchpad

EnerVista Launchpad is a powerful software package that provides users with all of the setup and support tools needed for configuring and maintaining Multilin products. The setup software within Launchpad allows for the configuration of devices in real-time, by communicating using serial, Ethernet, or modem connections, or offline by creating setting files to be sent to devices at a later time. Included in Launchpad is a document archiving and management system that ensures critical documentation is up-to-date and available when needed. Documents made available include:

- Manuals
- Application Notes
- Guideform Specifications
- Brochures
- Wiring Diagrams
- FAQ's
- Service Bulletins

### Viewpoint Monitoring

Viewpoint Monitoring is a simple-to-use and full-featured monitoring and data recording software package for small systems. Viewpoint Monitoring provides a complete HMI package with the following functionality:

- Plug-&-Play Device Monitoring
- System Single-Line Monitoring & Control
- Annunciator Alarm Screens
- Trending Reports
- Automatic Event Retrieval
- Automatic Waveform Retrieval

## User Interface

The D60 front panel provides extensive local HMI capabilities. The local display is used for monitoring, status messaging, fault diagnosis, and device configuration. User-configurable messages that combine text with live data can be displayed when user-defined conditions are met.

A 7" color, graphic HMI is optionally available that allows users to have customizable bay diagrams with local monitoring of status, values and control functionality. The alarm annunciator panel provides the configuration of up to 96 signals (alarms and status) with full text description.

## Typical Wiring

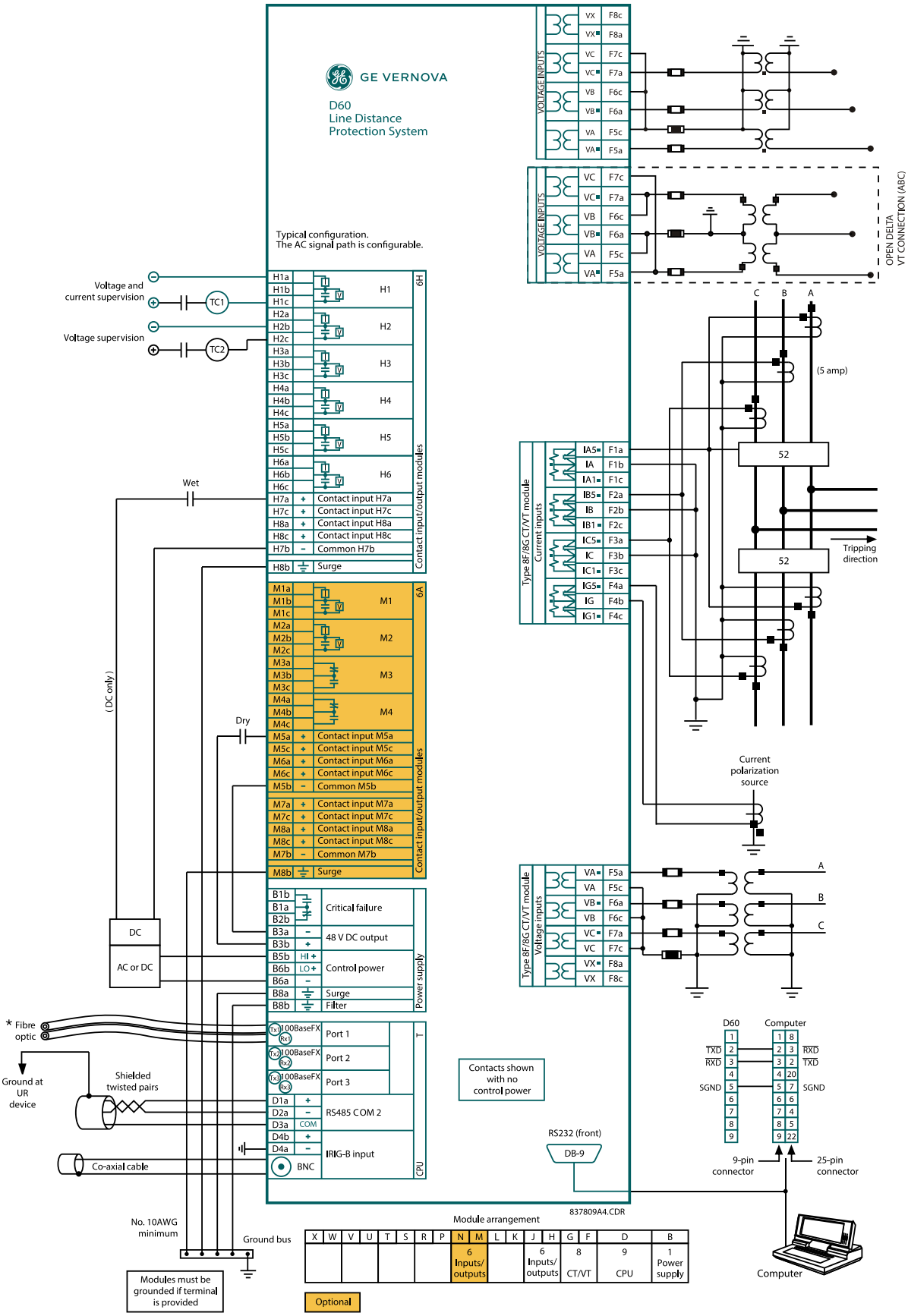

## Ordering

| | D60 - * ** - H * * - F ** - H ** - M ** - P ** - U ** - W** | For Full Sized Horizontal Mount |
|---|---|---|
| Base Unit | D60 | Base Unit |
| CPU | T | RS485 + three multimode SFP LC 100BaseFX |
| | U | RS485 + two multimode SFP LC 100BaseFX + one SFP RJ45 100BaseT. |
| | V | RS485 + three SFP RJ45 100BaseT |
| | W | RS485 + two 100BaseFx Eth, Multimode ST + one 10/100BaseT Eth, RJ-45[3] |
| Software Options[1] | 00 | No Software Options |
| | 02 | Breaker and Half |
| | 03 | IEC 61850 |
| | 05 | Breaker and Half + IEC 61850 |
| | 06 | Phasor Measurement Unit (PMU) |
| | 07 | IEC 61850 + Phasor Measurement Unit (PMU) |
| | 08 | Breaker and Half + Phasor Measurement Unit (PMU) |
| | 09 | Breaker and Half + IEC 61850 + Phasor Measurement Unit (PMU) |
| | A0 | CyberSentry UR Lvl 1 |
| | B0 | IEEE 1588 |
| | C0 | PRP |
| | D0 | IEEE 1588 + CyberSentry |
| | M0 | IEC 61850 + PMU + 61850-90-5 |
| | RM | IEC60870-5-103 + IEEE1588 + PRP + CyberSentry UR Lvl 1 + IEC61850 + Subcycle distance package |
| | RS | IEC60870-5-103 + IEEE1588 + PRP + IEC61850 + Subcycle distance package |
| | SA | IEC60870-5-103 + IEEE1588 + PRP + IEC61850 + CyberSentry UR Lvl 1 + MSOD |
| Mount | H | Horizontal (19" rack) - Standard |
| | A | Horizontal (19" rack) - Harsh Chemical Environment Option |
| | V | Vertical (3/4 size) - Standard |
| | B | Vertical (3/4 size) - Harsh Chemical Environment Option |
| User Interface | E | 7" Graphical display, USB front port & programmable pushbuttons - Multi-Language (FW 7.6x or higher) |
| | F | Vertical Front Panel with English Display |
| | I | Enhanced German Front Panel |
| | J | Enhanced German Front Panel with User-Programmable Pushbuttons |
| | K | Enhanced English Front Panel |
| | L | Enhanced English Front Panel with User-Programmable Pushbuttons |
| | M | Enhanced French Front Panel |
| | N | Enhanced French Front Panel with User-Programmable Pushbuttons |
| | Q | Enhanced Russian Front Panel |
| | T | Enhanced Russian Front Panel with User-Programmable Pushbuttons |
| | U | Enhanced Chinese Front Panel |
| | V | Enhanced Chinese Front Panel with User-Programmable Pushbuttons |
| | W | Enhanced Turkish Front Panel |
| | Y | Enhanced Turkish Front Panel with User-Programmable Pushbuttons |
| | H | Enhanced Polish Front Panel[3] |
| | O | Enhanced Polish Front Panel with User-Programmable Pushbuttons[3] |
| | Z | Enhanced Japanese Front Panel[3] |
| | X | Enhanced Japanese Front Panel with User-Programmable Pushbuttons[3] |
| Power Supply[2] | H | 125/250 V AC/DC w/ redundant 125/250 V AC/DC power supply |
| | H | 125/250 V AC/DC |
| CT/VT DSP | 8L | Standard 4CT/4VT w/ enhanced diagnostics |
| | 8M | Sensitive Ground 4CT/4VT w/ enhanced diagnostics |
| IEC 61850 Process Bus[4, 5] | 81 | 8 Port IEC 61850 Process Bus Module |
| | 85 | -9-2LE & 61869* Process Bus, 2 × 1000BaseF |
| | 86 | -9-2LE & 61869* Process Bus, 4 × 1000BaseF + 4 × 100BaseFx |
| | 87 | -9-2LE & 61869* Process Bus, 4 × 100BaseFx |
| Digital I/O | XX | No module |
| | 4A | 4 Solid State (No Monitoring) MOSFET Outputs |
| | 4C | 4 Solid State (Current w/opt Voltage) MOSFET Outputs |
| | 4D | 16 Digital Inputs with Auto-Burnish |
| | 4L | 14 Form-A (No Monitoring) Latchable Outputs |
| | 67 | 8 Form-A (No Monitoring) Outputs |
| | 6C | 8 Form-C Outputs |
| | 6D | 16 Digital Inputs |
| | 6E | 4 Form-C Outputs, 8 Digital Inputs |
| | 6F | 8 Fast Form-C Outputs |
| | 6K | 4 Form-C & 4 Fast Form-C Outputs |
| | 6L | 2 Form-A (Current w/ opt Voltage) & 2 Form-C Outputs, 8 Digital Inputs |
| | 6M | 2 Form-A (Current w/ opt Voltage) & 4 Form-C Outputs, 4 Digital Inputs |
| | 6N | 4 Form-A (Current w/ opt Voltage) Outputs, 8 Digital Inputs |
| | 6P | 6 Form-A (Current w/ opt Voltage) Outputs, 4 Digital Inputs |
| | 6R | 2 Form-A (No Monitoring) & 2 Form-C Outputs, 8 Digital Inputs |
| | 6S | 2 Form-A (No Monitoring) & 4 Form-C Outputs, 4 Digital Inputs |
| | 6T | 4 Form-A (No Monitoring) Outputs, 8 Digital Inputs |
| | 6U | 6 Form-A (No Monitoring) Outputs, 4 Digital Inputs |
| | 6V | 2 Form-A (Cur w/ opt Volt) 1 Form-C Output, 2 Latching Outputs, 8 Digital Inputs |
| | 6W | 30 Contact Inputs - Pin Terminals[3] |
| | 6X | 18 Form-A (No Monitoring) Outputs - Pin Terminals[3] |
| Transducer I/O | 5A | 4 dcmA Inputs, 4 dcmA Outputs |
| | 5F | 8 dcmA Inputs |
| Inter-Relay Communications | 2B | C37.94SM, 1300nm singlemode, ELED, 2 Channel singlemode |
| | 2I | Channel 1 - IEEE C37.94, 820nm, multimode fiber, 64/128 kbps; Channel 2 - 1300 nm, singlemode, LASER |
| | 2J | Channel 1 - IEEE C37.94, 820nm, multimode fiber, 64/128 kbps; Channel 2 - 1550 nm, singlemode, LASER |
| | 7B | 1300 nm, multimode, LED, 1 Channel |
| | 7C | 1300 nm, singlemode, ELED, 1 Channel |
| | 7H | 820 nm, multimode, LED, 2 Channels |
| | 7I | 1300 nm, multimode, LED, 2 Channels |
| | 7J | 1300 nm, singlemode, ELED, 2 Channels |
| | 7S | G.703, 2 Channels |
| | 7W | RS422, 2 Channels |
| | 73 | 1550 nm, singlemode, LASER, 2 Channels |
| | 77 | IEEE C37.94, 820 nm, multimode, LED, 2 Channel |

**Ordering Notes:**

1. To view all the options available for D60, please visit GE Vernova's Online Store https://store.gegridsolutions.com/viewproduct.aspx?Model=D60
2. Redundant power supply only available in horizontal unit. If redundant is chosen, must be same type. Maximum 2 per chassis.
3. Option available soon
4. Process bus module requires empty slots next to it.
5. Conventional DSP and Process Bus modules cannot run simultaneously

**Footnote:** * Upcoming release

For more information, visit
**gevernova.com/grid-solutions**

IEC is a registered trademark of Commission Electrotechnique Internationale. IEEE is a registered trademark of the Institute of Electrical Electronics Engineers, Inc. Modbus is a registered trademark of Schneider Automation. NERC is a registered trademark of North American Electric Reliability Council. NIST is a registered trademark of the National Institute of Standards and Technology.

Multilin, FlexLogic, EnerVista and CyberSentry are trademarks of General Electric Company.

GE Vernova reserves the right to make changes to specifications of products described at any time without notice and without obligation to notify any person of such changes.

© 2025 GE Vernova and/or its affiliates. All rights reserved. GE and the GE Monogram are trademarks of General Electric Company used under trademark license.

GE VERNOVA

GEA-12592N-(E)
English
250708